FL-8

FISH FINDER/DEPTH FINDER

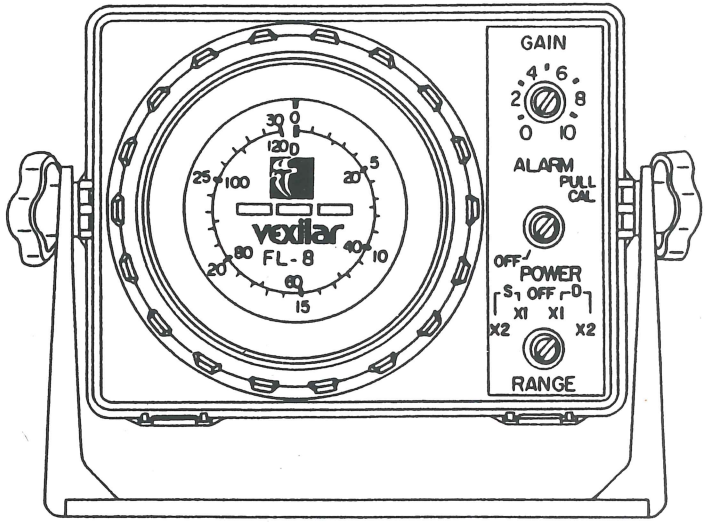

VEXILAR, INC.

NOTICE

Units with a serial #333201 or higher contain a new feature that allows the operator to control the output power. High power should be normally used except for shallow water fishing or fishing in the weeds. The Low Power operation will reduce the unit's sensitivity which will help for shallow water and weed operation.

This power control is built into the gain control feature. This control has push/pull switch. The "IN" position is normal – High power, and "OUT" position is Low Power operation.

VEXILAR, INC.

MINNEAPOLIS, MINNESOTA 55420

WWW.VEXILAR.COM

CONTENTS

	Page
General Information	1
Specifications	2
Installation (Unit)	3
Power Connection	4
Transducer Installation (Transom)	5-6
Transducer Installation (Inside-Hull)	7
Transducer Installation (Through-Hull)	8
Transducer Maintenance	9
Transducer Connector Installation	9
Controls and Indicators	10-11
Typical Indications	12-15
Schematic Interference Suppression	16-17
Mechanical Darwing	18
Parts List	19-20
Interference Supression	22
Trouble Shooting	23
Operational & Ice Fishing Tips	24-31

LIST OF ILLUSTRATIONS

TITLE

Figure		Page
1	FL-8 Depth Sounder	1
2	Indicator Mounting	3
3	Power and Transducer Connections	4
4	Transducer Installation	5
5	Transducer and Cable Mounting	6
6	Inside Hull Transducer Mounting	7
7	Through Hull Type Transducer Mounting	8
8	Transducer Connector Assembly	9
9-13	Controls and Indicators	11-15
16	Schematic Diagram	16-17
14	Mechanical Parts Drawing	18
15	P.C.B. Layout Drawing	21

GENERAL INFORMATION

The FL-8 Colormatic Depth Sounder, Figure 1, is small light-weight unit that is rugged and versatile enough for any size boat. The FL-8 will indicate water depth, bottom conditions, and intervening objects, such as fish, in three distinct colors. Strong echoes from the bottom are displayed in red while intermediate echoes are displayed in orange or green depending on the strength of the returning signal. Typically, an orange LED flash would indicate large fish or school of fish. Green would indicate smaller fish, thermoclines or plankton. FL-8 also contains an alarm that can be pre-set to sound when approaching shallow water or when suspected fish returns are present.

The depth sounder transmits bursts of high frequency pulse (200 KHz) which are converted from electrical to mechanical energy by the transducer. These pulses radiate from the transducer to the bottom and are reflected back to the transducer. The transducer converts them from mechanical vibrations to electrical pulses which are displayed on the unit's face. These pulses travel at approxmately 4800 feet per second to provide a constant update of water depth and location of intervening objects, such as fish.

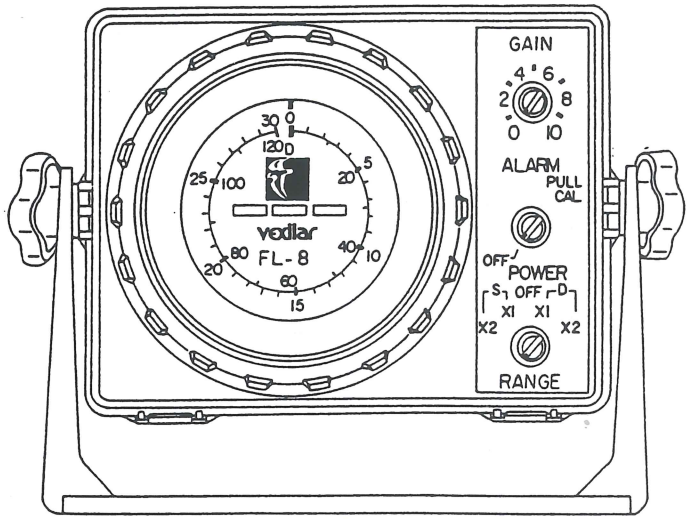

Figure 1. FL-8 Depth Sounder

SPECIFICATION

	FL-8
Frequency	200 KHz
Range	S X1 0 - 30 Feet X2 0 - 60 " D X1 0 - 120 " X2 0 - 240 "
Sounding Rate/ Pulse Length	S/R P/L S X1 2392/min 0.09 msec X2 2392 0.19 D X1 1196 0.24 X2 598 0.35
Output Power	50 Watts effective
Voltage & Current	DC 12V @ 0.2 Amps
Display Color	Red, Orange and Green (6db step)
Scale Diameter	
Alarm Range	S X1 3.2 Feet (minimum) X2 3.6 " (") D X1 4.7 " (") X2 6.7 " (") Full scale (maximum)
Weight	2.5 lbs

DIMENTIONS:

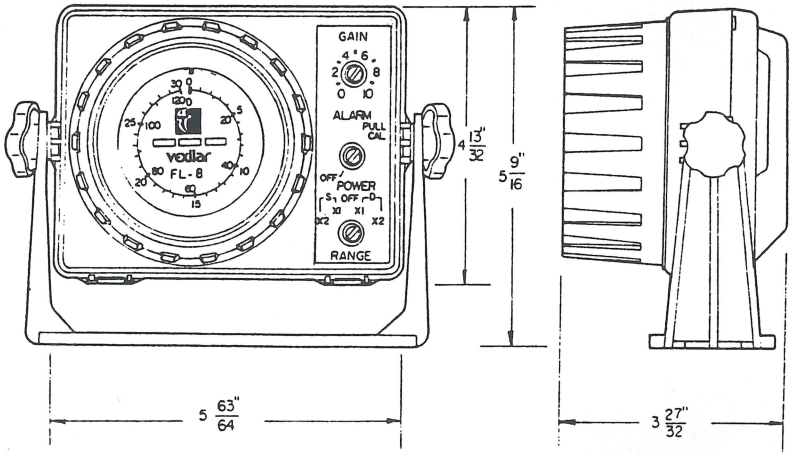

INSTALLATION

INDICATOR MOUNTING

The indicator can be mounted in any convenient location that has a flat surface. The adjustable bracket, Figure 2, permits mounting on either a bottom or an overhead supporting surface or a bulkhead.

If the indicator is mounted near a magnetic compass, check that is does not affect the compass readings. If compass readings are affected, select an alternate mounting site.

Mount indicator where it can be easily viewed. However, it should be mounted out of direct sun light; otherwise, the sun shield may have to be used.

Although the unit is splash proof, it should be sheltered from the weather. (Warranty does not cover water or salt water damage.)

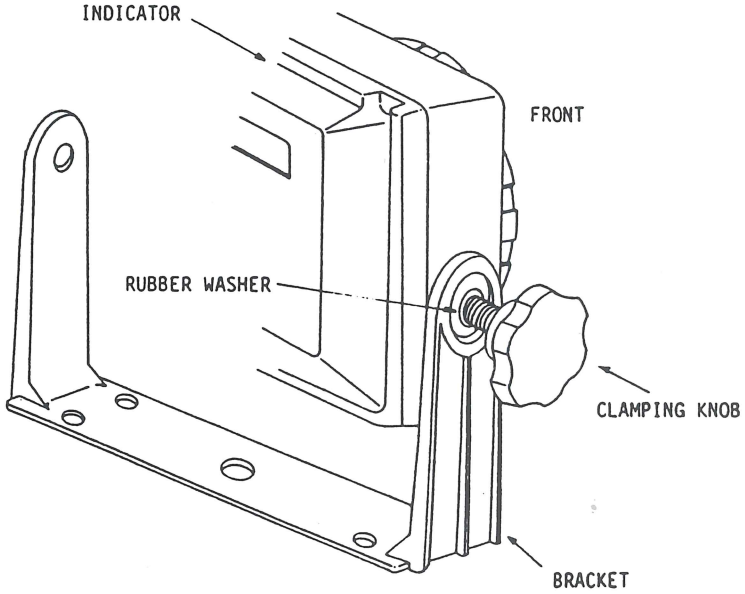

Figure 2. Indicator Mounting

POWER CONNECTION

Connect the plug of the power supply cord to the power supply socket located in the rear of the cabinet, Figure 3. Connect the red wire to the positive terminal and the black wire to the negative terminal of the external battery.

To minimize extraneous electrical interference, the power cord should be connected directly to the battery terminals, and it should not be routed in parallel with the transducer cable.

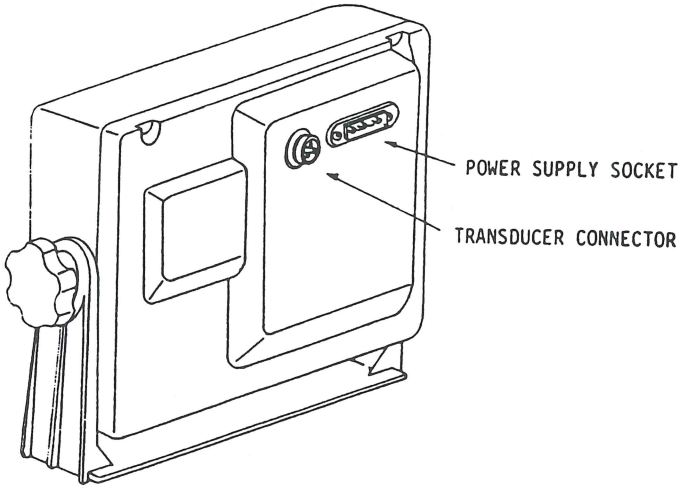

Figure 3. Power and Transducer Connections

TRANSDUCER INSTALLATION

For proper performance, the transducer mounting location must be choosen carefully. The transducer should be located in an area that is relatively free of white water. To determine the best location, run the boat at varying speeds and observe the water as it passes under the transom. Keep the transducer and its cable as far as possible from the boat's power cables, tachometer and other electrical cables.

After a suitable location is found, assemble the transducer, Figure 4, temporarily as outlined below:

1. Use a straight edge to align transducer with the bottom of the hull and mark the mounting hole location on the transom.

2. Drill four 1/8" holes and mount the brackets with the screws provided. Coat the screws with bedding compound to prevent leakage.

3. Position transducer per Figure 5 and tighten nuts and screws.

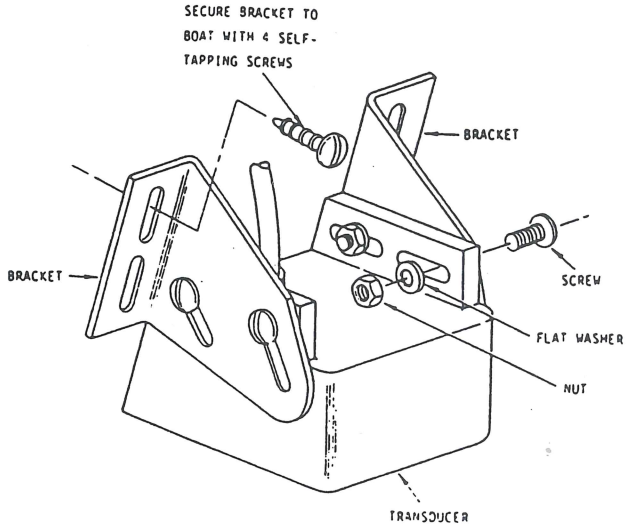

Figure 4. Transducer Installation

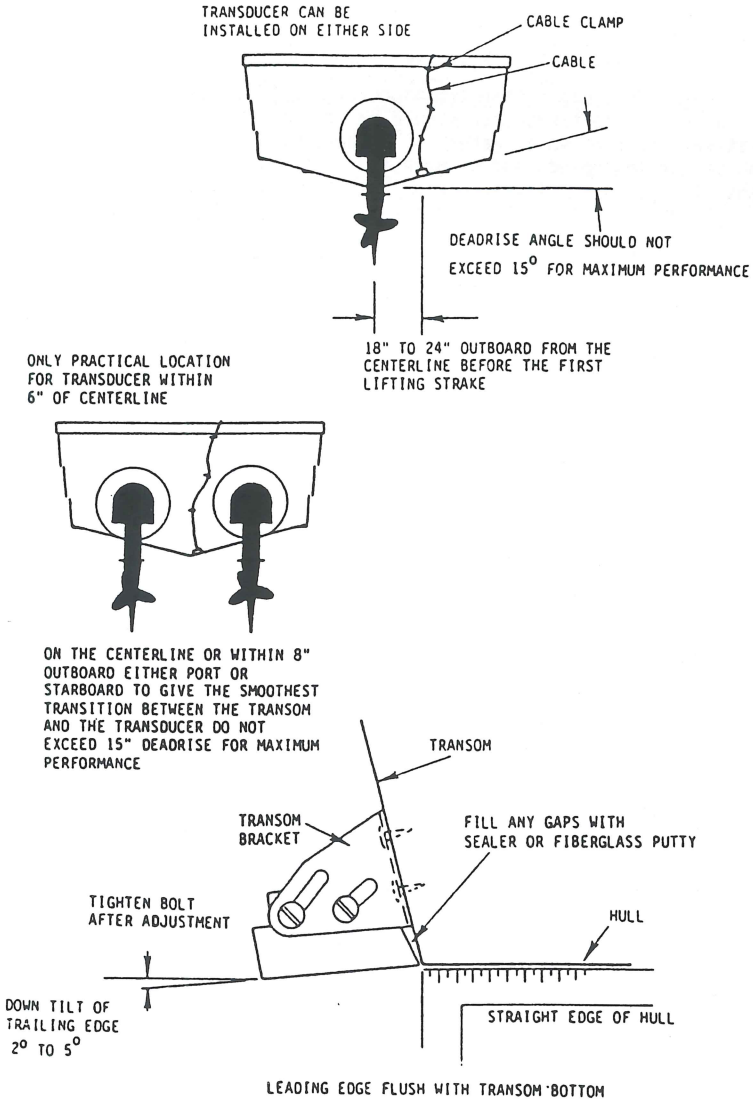

Figure 5. Transducer and Cable Mounting

Inside Hull Transducer Mounting The power and sensitivity of the unit will be reduced when this method is used. Maximum depth readout and fish echoes will be affected. In many cases, good results can be attained by mounting the transducer inside the hull, generally in the bilge area. It is important to ensure that the transducer is placed in an area that has a single hull thickness. There must not be any air or flotation material, other than solid fiberglass, between the transducer's struts or ribs which generally run under the hull.

To determine the best position for the transducer, put some water in the bilge, wash the transducer face with a mind detergent and place the transducer in the bilge so that the transducer face is flush with the hull. Run the boat at various speeds and move the transducer to different locations to determine the best location for permanent installation.

To ensure a good transducer installation, drain all the water from the bilge, thoroughly clean the inside hull where the transducer is to be mounted, and clean the transducer face with the recommended detergent. Allow both to dry completely, then use a good silicone adhesive or fiberglass resine to bond the transducer face to the hull (coat the transducer face and hull with adhesive). Press the transducer firmly to the hull and gently twist back and forth to remove any air which may be trapped in the adhesive. Allow to dry per adhesive instructions.

The depth sounder will now operate with no water in the bilge. This type of mounting is preferred, as oily bilge water will tend to make sounding through the hull more difficult, and the transducer could move around if it were not secured in place.

This type of transducer mounting works best on fiberglass and aluminum boat, and in many cases, good-to-fair results can be obtained in wood boats providing the hull is not too thick and it is void of air.

On fiberglass flotation hulls, Figure 6, the inner hull can be removed and a reservoir made for transducer placement. After the reservoir is made, check depth-sounder operation before securing the transducer down.

NOTICE TO OWNER AND INSTALLER

Do not mount any transducer inside of a wooden hull. This type of installation will not operate. Inside installation may permit operation in some types of plastic and fiberglass hulls. This is a trial and error procedure and each installation must be tested before it is completed.

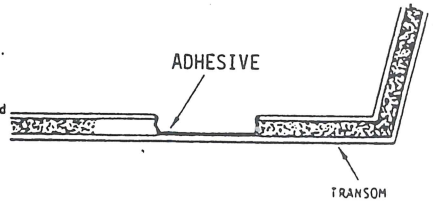

Figure 6. Inside Hull Transducer Mounting

Through-Hull Type Transducer Mounting (Recommended for Optimum Performance) Install the transducer so that its working face will be parallel to the water line when the vessel is in its normal upright position and will remain submerged when the vessel is heeled and under way. The pointed end of the transducer must point forward. Since air bubbles will greatly decrease the efficiency of the transducer and sensitivity of the receiver, the mounting site should be as far from air bubble streams as possible.

In through-hull installation, Figure 7, use leveling blocks, as required, to ensure that the transducer face is parallel to the water line.

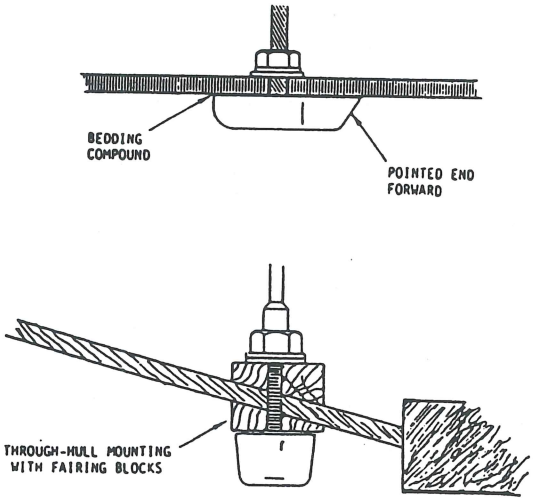

Figure 7. Through-Hull Type Transducer Mounting

Transducer Maintenance

If boating in salt water, paint the transducer with thin coat of antifouling. Allow time for the face of the transducer to become wet (coupled intimately to the water) after installation or after returning to the water from storage.

Clean the face of the transducer with a mild detergent or soap pad if the transducer's "vision" becomes obstructed, which may happen through constant exposure to the oily waters of a marina. Oil will act as an insulator and cause the face to become decoupled from the water or unwetted. Cleaning will restore the signal transmitting and receiving.

If the instrument fails to function, check all transducer electrical connections before calling a serviceman.

Do not coat the face of the transducer with heavily-pegmented antifouling paints, especially those filled with cuprous oxide, because they reduce the sensitivity or "vision" of the transducer.

Transducer Connector

The Transducer cable is a two-wire (black and white) shielded cable. Using a proper stripping tool, prepare the end of the cable as shown in Figure 8.

Unscrew the cable clamping screws and plug-body securing screw of the connector and slide the shell and coupling ring on the cable. Solder the black lead to terminal No.1, the white lead to terminal No.3 and the shield to terminal No.2. The terminal identification numbers are indicated on the plug-body face.

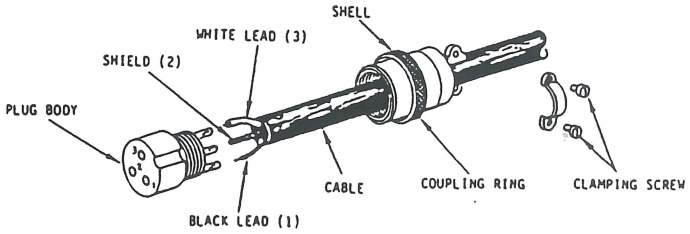

Figure 8. Transducer Connector Assembly

CONTROLS AND INDICATORS

DEPTH RANGE CONTROL

This is combination on/off and depth range switch. This control enables you to select electrically one of four depth ranges (0-30 ft, 0-60 ft, 0-120 ft or 0-240 ft) as marked on the panel.
With the selector in the S-X1 position, read range on the 0-30 feet scale. If the selector is in the D-X1 position, read range on the 0-120 feet scale.

GAIN CONTROL

When the control is rotated clockwise, Figure 9, the unit will increase the sensitivity of the unit proportionately; counterclockwise rotation will decrease the sensitivity proportionately.
Gain setting is very important on this unit because the point at which it is set will be a reference point for all color indications being displayed. For the best operation, increase the gain control so that the depth light is red for a strong echo, such as the bottom.
Weaker echoes, like those from small fish, will appear green; stronger echoes from intermediate returns may appear orange, indicating large fish.
Echo from a hard bottom, free of debris and weeds, will be indicated as a solid red light. Debris, weeds, and other bottom clutter will be indicated by a orange light adjacent to the red bottom light, Figure 9. This results from weaker echoes from tops of weeds or other soft materials near the bottom.
When the bottom strobe lights change from red to orange or green, it indicates that bottom consistency is softer than that used as reference to set the gain. As an example, if fish appear as green or orange echoes, an increase in gain may cause the fish echoes to appear as red strobes, because by increasing the gain the reference level for the color display is changed.

ALARM COMTROL

As the ALARM control knob is pulled, an alarm calibration marker (red) appears on the dial. As the knob is rotated clockwise, a calibration marker signal will begin to circle the dial in a clockwise direction. By continuing to rotate the marker knob, the signal alarm can be set at any depth down to a minimum of 1.5 feet (or fathoms) on the first range to a minimum of 5 feet (fathoms) on the range.

NOTE

> Once the unit has been calibrated, the ALARM knob can be depressed so that the calibration signal will not interfere with other signals such as bottom, brush, fish, etc.

Once the depth alarm has been set, target echoes (orange or red signal) between the surface and the predetermined depth setting will sound the alarm.

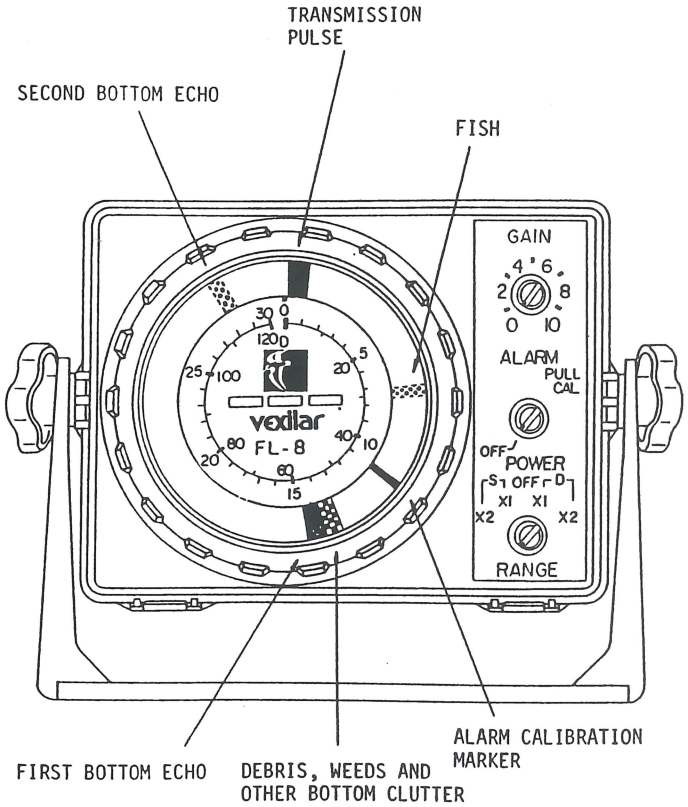

Figure 9. Controls and Indicators

TYPICAL INDICATIONS

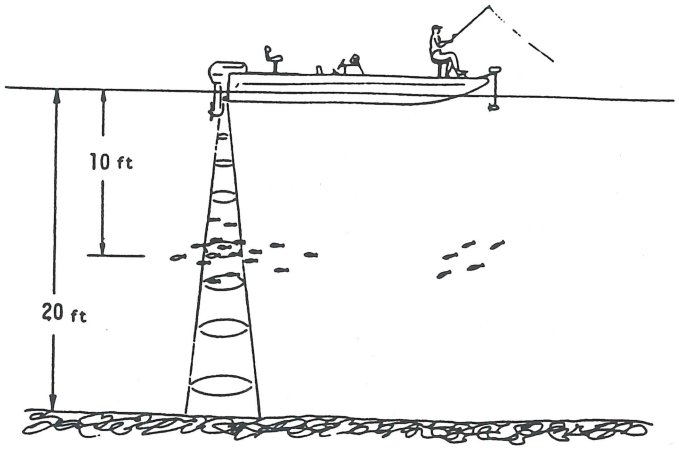

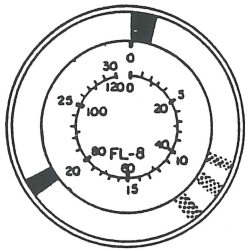

RANGE:
S X1 (0-30 ft)

Depth is 20 feet with bottom color in red. Fish are shown from 9 to 12 feet and their color may vary from green to orange, depending on their size.

Figure 10. Controls and Indicators - (2)

TYPICAL INDICATIONS

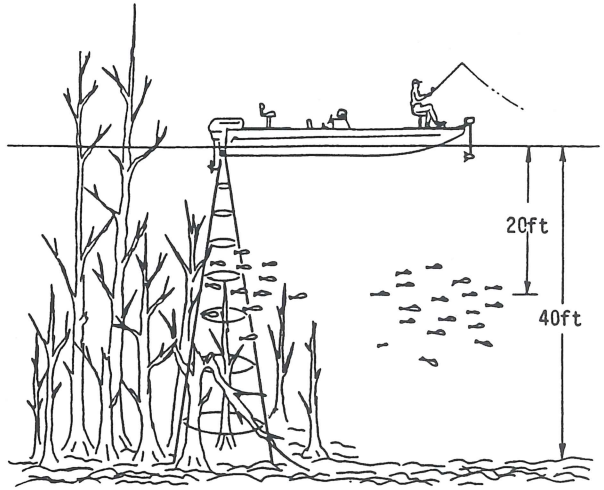

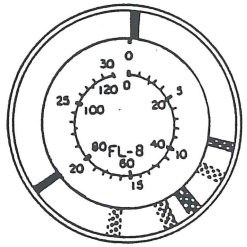

RANGE:
S X2 (0-60 ft)

Depth of water is shown in red at 40 feet. Standing timber can be confused for fish, which are hard to distinguish but usually found in this type of cover.

Figure 11. Controls and Indicators - (3)

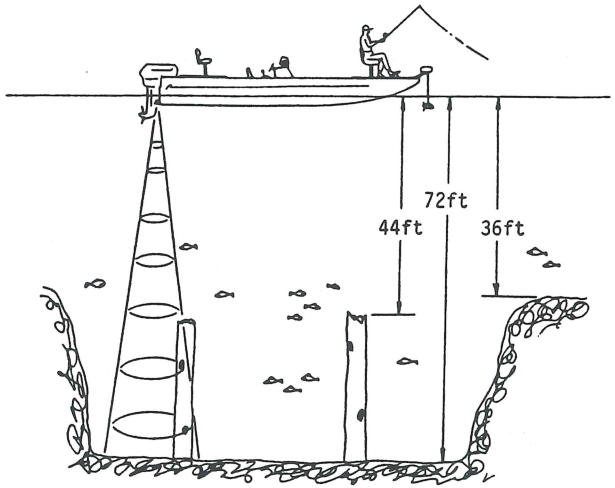

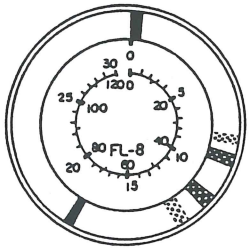

RANGE:
D X1 (0-120 ft)

Red strobe indicates depth of 72 feet. Broken telephone pole at 44 feet is shown in red or orange, which could be mistaken for fish. However, the 36 and 44 feet echoes do not move, indicating stationary objects.

Figure 12. Controls and Indicators - (4)

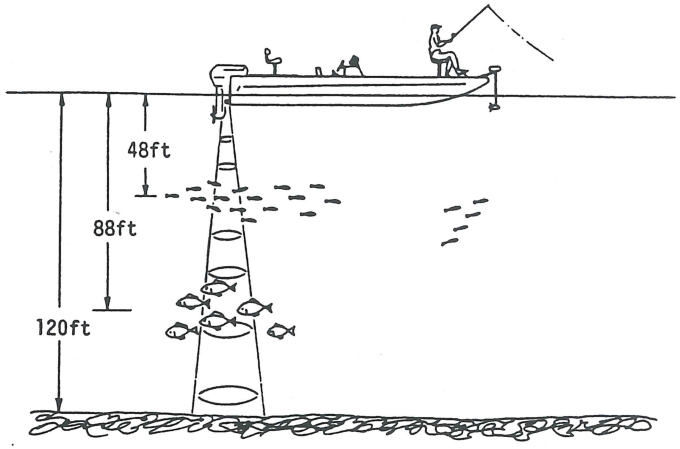

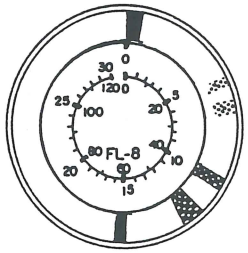

RANGE:
D X2 (0-240 ft)

Depth is 120 feet and is displayed in red. Small bait fish are indicated at 40 to 56 feet and are shown as green. Larger fish are indicated at 80 to 96 feet and probably will be shown as orange.

Figure 13. Controls and Indicators - (5)

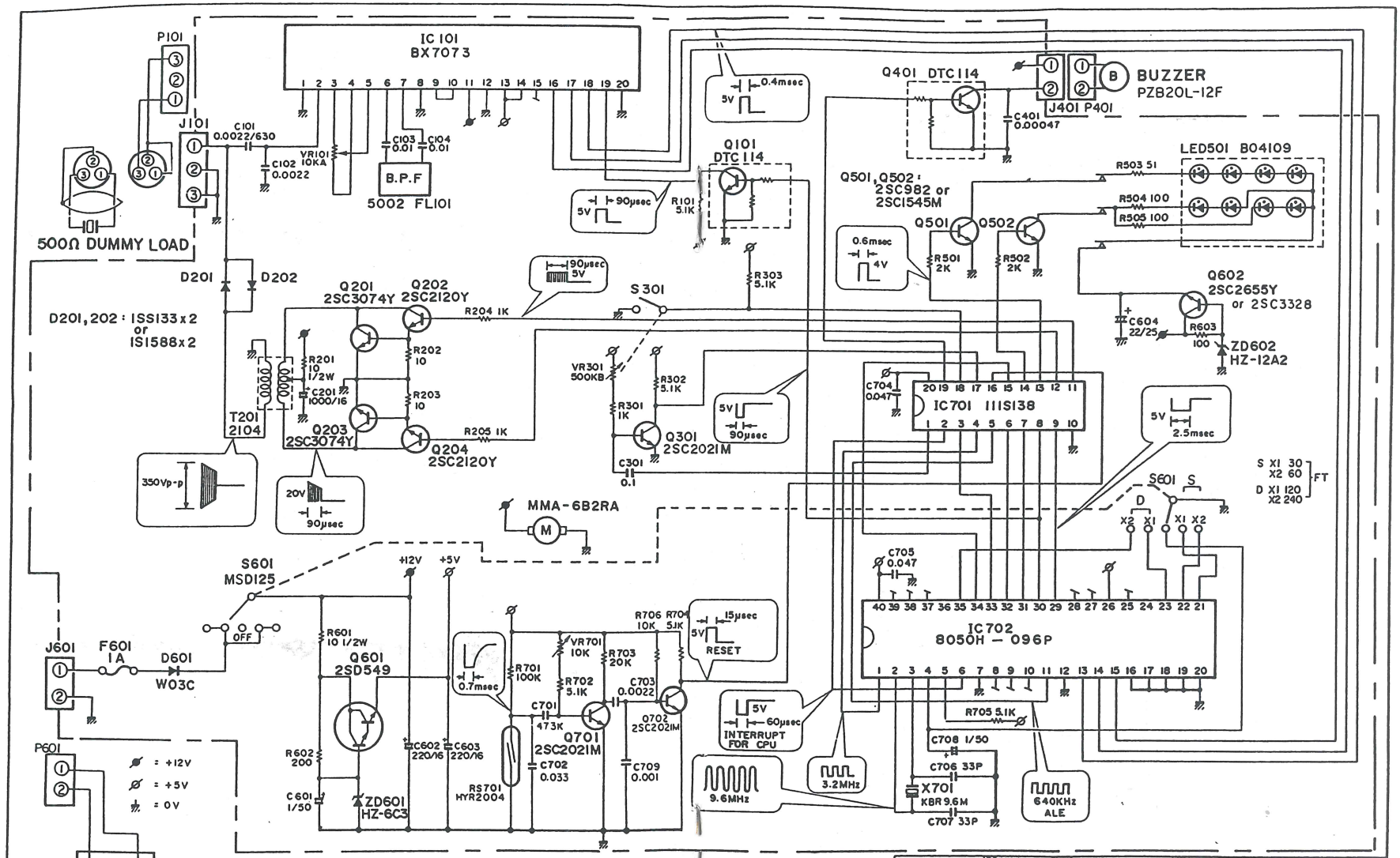

NOTE : Unless otherwise specified, resistance values are in ohms, ¼w and capacitance values are in microfarads.
Part of circuit or semiconductors is subject to change as a result of improvement in design and techniques.

DRAWN: Art ENTERPRISE	FL - 8	
CHANGED: T·NODA	RECORDER	SCHEMATIC DIAGRAM
CHECKED: T. NODA	DATE: 1984. JULY	DRAWING NO. HF1473731-M
APPROVED		

(FL-8) MECHANICAL DRAWING

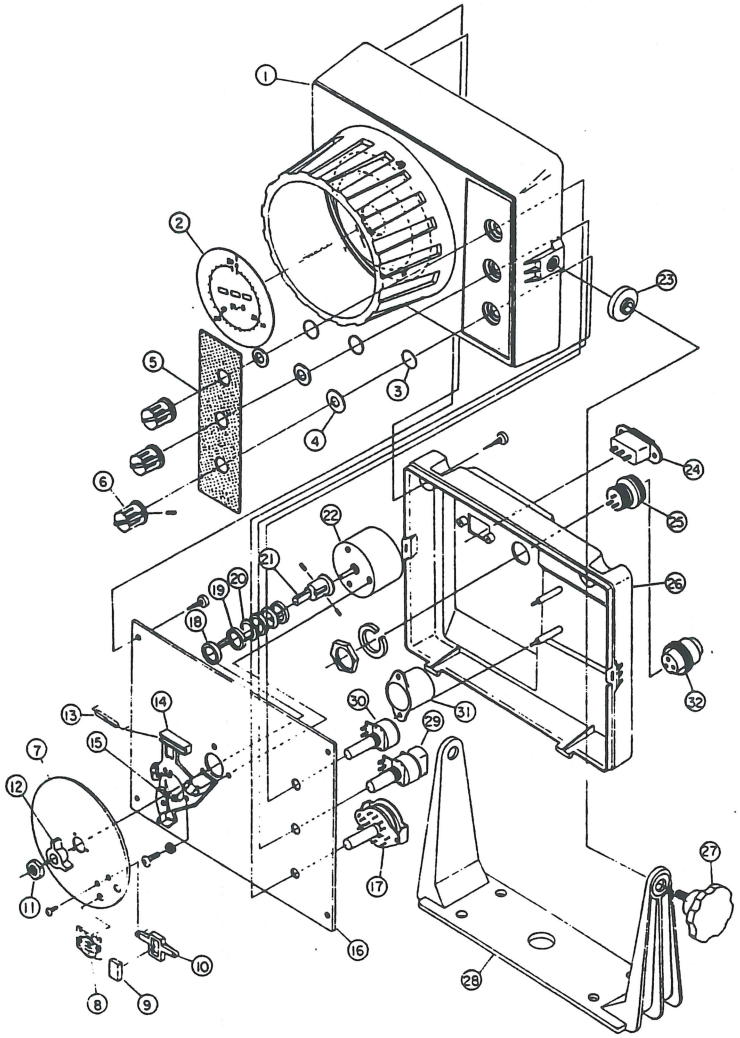

PARTS LIST

DRAWING NO.	CODE NO.	DESCRIPTION	
1	860715	Front Case (with Plastic Window)	HF74H001
2	291705	Scale Panel	HF828011
3	886095	Rubber O Ring	P-6
4		Plastic Plane Washer (M6)	
5	291785	Front Panel	HF828009
6	170255	Control Knob	
7	285645	Disc P.C.B.	HF826005
8	155055	LED Assembly	Bu 4109
9	158025	Magnet	7X6X3.3
10	615015	Magnet Cover	HF82H006
11		Nut (M6)	
12	615025-5	Stopper Base	SKB141639-5
13	160025	Reed Switch	HYR2004 20-25
14	615025-7	Reed Switch & Brush Base	SKB141639-7
15	615025-6	Carbon Brush with Plate Spring	SKB141639-6
16	285655	Main P.C.B.T/R (Complete)	HF826004
17	140145	Rotary Switch (RANGE) S601	MSD 125
18	615025-3	Plastic Collar	SKB141639-3
19	615025-2	Slip Ring	SKB141639-2
20	615025-4	Slip Ring Insulating Collar	SKB141639-4
21	615025-1	Slip Ring Boss	SKB141639-1
22	260445	Motor	MMA-6B2RA
23	590025	Rubber Washer	HF74A004
24	890058	Receptacle (Power)	EIS w/2P
25	890068	Receptacle (Transducer)	EIS w/3P
26	860725	Rear Case	HF74H002
27	930025	Knob Bolt	HF74A005
28	900045	Bracket	HF74H003
29	133275	Variable Resistor with Switch (ALARM)	
30	133145	Variable Resistor (GAIN) VR101	10 KA
31	182165	Alarm (B601)	PZ820L12
32	210145	Transducer Plug	

PARTS LIST (Continued)			
CODE NO.	SYMBOL NO.	DESCRIPTION	
256415	T 201	Transformer	2104
097045	Q 101, Q 401	Transistor	DTC114
092415	Q 201, Q 203	Transistor	2SC3074Y
092255	Q 202, Q 204	Transistor	2SC2120Y
092205	Q 301,Q 701,Q 702	Transistor	2SC2021M
092445	Q 501, Q 502	Transistor	2SC982(or 2SC1545M)
094055	Q 601	Transistor	2SC549
092365	Q 602	Transistor	2SC2655Y
110015	IC 101	Integrated Circuit(IC)	BX 7073
109075	IC 701	Integrated Circuit(IC)	111S138
109065	IC 702	Integrated Circuit(IC)	8050H-096P
080125	D 201, D 202	Diode	1SS133(or 1S1588)
080105	D 601	Diode	W03C
081155	ZD 601	Zener Diode	HZ-6C3
081195	ZD 602	Zener Diode	HZ-12A2
123145	VR 701	Variable Resistor	10K
236035	FL 101	Band Pass Filter	5002
152105	X 701	Ceramic Resonator	KBR 9.6M
157125	F 601	Fuse	1A
192015	J 601	Connector 2 pin Male(PCB)	
193015	P 601	Connector 2 Pin Female	
192035	J 101	Connector 3 Pin Male(PCB)	
193025	P 101	Connector 3 Pin Female	
193015	P 401	Connector 2 Pin Male(PCB)ALM	
192015	J 401	Connector 2 Pin Female(PCB)ALM	

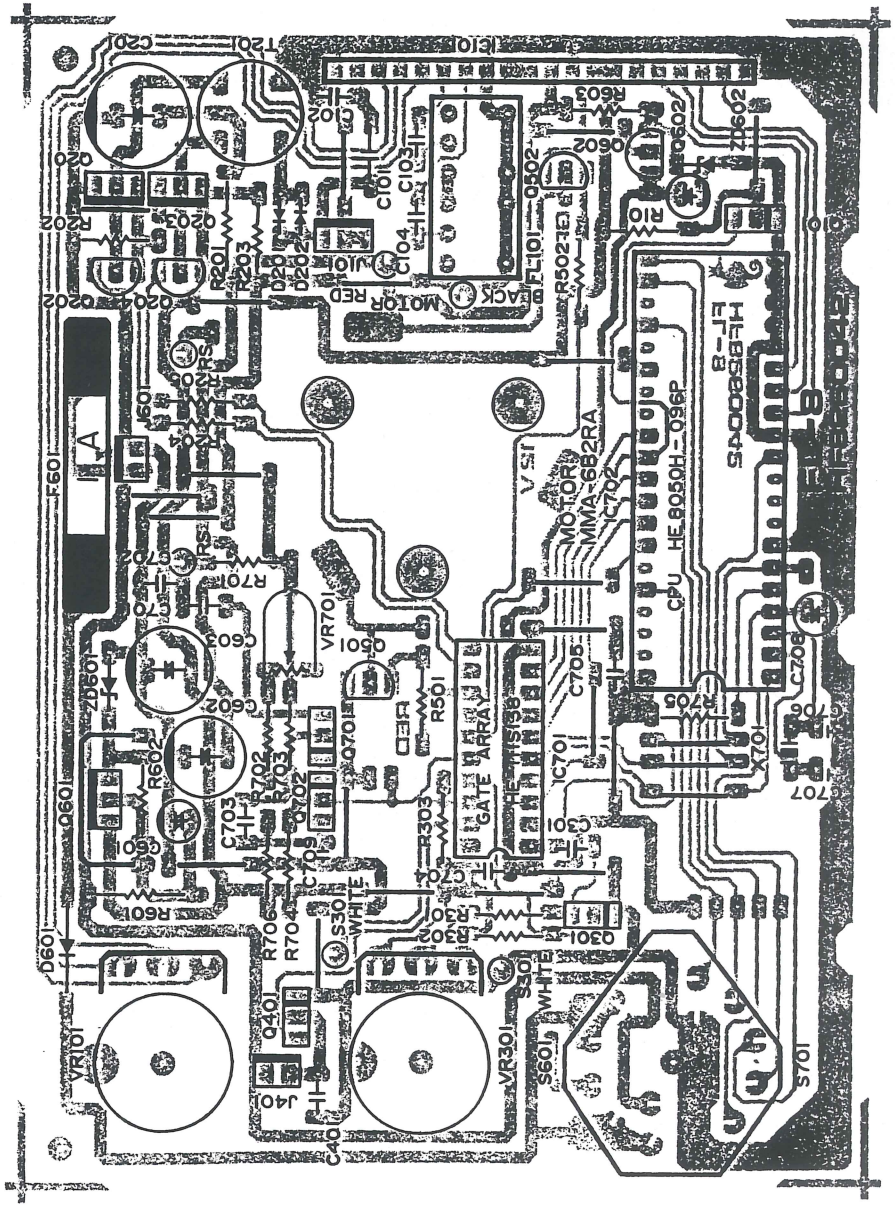

INTERFERENCE SUPPRESSION

Interference in sufficient magnitude will cause erratic performance of the depth finder and possibly cause multiple strobes around the dial.

Check installation for interference by stopping the engine in medium depth water and observing the depth finder. Then start the engine with the propeller disengaged; increase engine RPM and observe the indicator for interference.

If interference is present, one or more of the following remedies may affect a cure:

1. Install a suppressor on the center lead of the distributor. Install a coaxial condenser between the ignition coil and the ignitionswitch.

2. Install coaxial condensers on the electrical power line and the control leads which leave the engine compartment.

3. Bond engine, electrical accessories, propeller shaft, and rudder to each other and to the ground plate, if installed, with heavy copper grounding straps.

4. Resistor type spark plugs and/or copper screening on the inside of the engine compartment may be required in extreme cases.

On some engines, Champion "U" type spark plugs (such as UJ6) are specified. It is virtually impossible to eliminate noise caused by these plugs as they have an extra spark gap near the top of the plug which causes the leads to radiate noise. Replace these plugs with a resistor type plug such as the Champion XJ6, XJ8, etc. Check all high tension wires for continuity.

Ingnition coil should be mounted on the engine. Clean away paint to ensure a good ground. Plastic-encased coils radiateexcessive noise and should be replaced with a standard metalcased unit.

Older types of voltage regulators contain a vibrating set of contacts to control voltage. If the usual capacitors eliminate the noise, replace with a solid-state regulator which has no moving parts.

Some electrical tachometers cause considerable radiation of spark noise. This type of tach connects to the points of the distributor. Disconnect the tach wire at the distributor, and note the noise reduction. This lead could be shielded or a special tach filter installed. If SUN tachs are used, all wires must be shielded and the,plastic-cased sender unit, which contains a vibrating set of contacts, should be completely shielded in a metal enclosure.

Your authorized marine electronic dealer will be familiar with the methords of reducing electrical interfernce and is qualified to assist you should a problem exist.

TROUBLESHOOTING CHART

SYMPTOM	POSSIBLE CAUSE
Unit turned on, no display, and motor does not run.	Also check for proper polarity at battery and that you have a fully charged battery. The FL-8 will not have any lights appear if the supply voltage is below 10 volts.
Unit turned on, no display, and motor is running. red display can be obtained.	LED display board or other ploblem that will require shop service.
Unit works fine when boat is sitting still or running at slow speed, but no bottom return is seen at higher	Transducer is not in contact with water or too much white water is under the transducer face. Check or change transducer location. The pulse of sound emitted by the transducer travels at a speed of 4800 feet per second, so if the unit operates satisfactrily sitting still, it will work satisfactrily at any boat speed providing the transducer is properly located.
Unit works fine when boat's engine is off but has multiple strobes around the dial when engine is running.	Unit is picking up electrical interference from the boat's engine. Refer to section on engine interference.
Unit works fine but bottom light disappears when boat is in reverse or when passing over another boat's wake.	Unit cannot read through white water because most of the pulse is reflected.
Operation of unit is generally normal but occasionally zero light gets wider.	This is generally caused by heavy seas or wave action pushing tiny air bubbles down, as deep as 10-15 feet, and the unit is picking up these air bubbles and displaying them as target echoes.
Operation normal but weak echo appears red instead of green or orange.	Gain control is set too high.
Unit turned on and has zero mark, but no bottom return is displayed at any gain setting.	Transducer is not in contact with water. Transducer connector is not in place. Bad transducer or broken wire at connector.
Unit operation is normal but alarm does not work.	Check manual for alarm operation instructions. Alarm buzzer is bad.

FL-8 OPERATIONAL QUESTIONS AND ANSWERS

WHERE SHOULD THE GAIN CONTROL BE SET?

For ice fishing – the gain control should be set so the bait you are fishing with is shown in green color on the dial. This color should be set while the lure or bait is at the normal fishing depth. As the bait is raised toward the surface the colors most likely will change into some orange and possible all three colors just below the surface. This happens because as the bait is raised towards the surface the signal strength from the bait get stronger, resulting in color change.

For summer fishing – set the gain control so to get a strong bottom echo along with a second echo. The leading edge of the bottom echo will show a solid Red band, then bleeding into the orange color, then the trailing edge of the bottom will bleed from orange into the green color. Good bottom echoes most of the time will show all three colors, starting with the Red, Orange, into Green.

WHY CAN'T I SEE MY BAIT WHILE ICE FISHING?

The transducer mounted to the ice box arm MUST be pointed straight down (perpendicular to the bottom). To find this perpendicular position – adjust the arm and xducer so the bottom echo or echos on the display readout are indicated with MAXIMUM COLOR for their display. As the arm is moved in a figure (8) you will notice the bottom echos changing in colors. The goal is to get the bottom colors in max. red color, max. orange color, and max. green color – all three colors will be present in the bottom echo.

Once this perpendicular position is found it is more easy to lower your bait down beside the transducer housing and follow it to the bottom with the lowest gain setting. This is because the strongest signal with in the cone of sound is at the perpendicular line to the bottom. If the transducer is not at the perpendicular position, your cone of sound will be aimed off to the side of the ice fishing hole causing the bait not to be seen at all times.

WHAT COLOR SHOULD FISH BE?

For ice fishing – with the FL-8 being operated with the perpendicular position found, the fish target entering the out side of the cone of sound will appear in GREEN, as the move towards the bait it will add some ORANGE into the center of the signal, and if the fish continues to the perpendicular line (at your bait) RED will be added to the center of the fish target. These color changes will take place automatically without adjusting the gain control. This color change feature allows the operator to observe if the fish is moving towards or moving away from your bait.

WHY DOES SOME BAITS SHOW UP BETTER THAN OTHERS?

The amount of REFLECTIVE SURFACE AREA on the lure is the main reason. A vertical thin lure is not as easy to see as a horizontal fat lure.

HOW LONG WILL MY BATTERY LAST ON THE FL-8?

The FL-8 draws .250 amp. or ¼ of an amp. The FL-8 stops operating when the battery voltage drops to approx. 9.0 volts dc. When the FL-8 starts to become inoperative – the motor turns with no display lights and the alarm will sound off continuously. A battery with 6.5 amp/hr. rating should run the FL-8 for 17-19 hrs. inside fish house with temperature of 60 degrees F. or higher. Outside the fish house in 10 degree F. temperature the battery should last for 11 hrs.

HOW FAR DOWN THE ICE HOLE DOES THE TRANSDUCER HAVE TO BE?

Water contact only! The bottom or the face of the transducer only has to make contact with the water in order to get a good transfer of sound waves into the water. Thus, this water contact is necessary to get the sound waves out of the water when they return from the bottom.

There are times (usually deep ice – 36″ or more) when the transducer needs to be placed below the bottom of the ice. The zero indication of the Flasher will be unusually wide, 8 to 10 feet wide. This can be caused by the transmitted signal ringing back and forth through the depth of the hole. By extending the transducer beyond the bottom of the hole a lot or most of this ringing can be eliminated. Now the lake depth must be corrected for the new position of the transducer.

WILL THE FL-8 READ THROUGH THE ICE?

YES! It will read through ice easily provided the ice is CLEAR ICE and not MILKY ICE. Remember the transducer must have GOOD CONTACT with the surface of the clear ice and the most common way to accomplish this "WETTING" action is to use some bio-degradable RV anti-freeze or water. Pour a small puddle of solution onto the ice and set the transducer face into the puddle of solution. A bottom indication should appear on the sounder's dial at an appropriate depth.

WILL INTERFERENCE DEVELOP IF TWO DEPTHSOUNDERS ARE USED IN THE SAME FISH HOUSE?

YES! The two factors that determine if this happens are: a. the depth of the water and b. how far apart the two sounders are placed. If this interference is happening, each of the sounders will have a non stop rotating light moving around the dial. One moving light rotates around the dial clockwise and on the other sounder the light will rotate in the counter clockwise direction. To eliminate this problem you can either move the sounders farther apart or shut one off.

WHICH SIDE OF THE TRANSDUCER SHOULD BE AIMED TOWARDS THE LAKE BOTTOM?

Most of today's transducers have two sides to them. Side A is the side that the cable enters transducer and usually has holes, slots, or some method to attach a bracket to. Side B is usually flat but may have different parameter shapes such as round, square or rectangular, or arrow shaped. The Side B or the FLAT side should be aimed towards the lake bottom.

WHAT IS THE "S" CABLE?

The "S" Cable is the short saying for Suppression Cable. The Suppression Cable is attached between the transducer and the FL-8 unit. The cable has mating connectors on both ends that match both with the FL-8's transducer jack and the transducer's cable connector. It is designed to work with ALL FL-8s that have been manufactured – Si-Tex, Micronar, Hondex, and Vexilar. The Suppression Cable was designed as a 6″ cable assembly that could be easily installed in the field and used with all FL-8s.

The Suppression Cable, when attached in series with the transducer, suppresses, attenuates, or cuts down on the amount of transmitted signal going into the water. As a result of this, there is less signal coming back from the bottom of the lake or reflected targets. When this happens the units sensitivity is REDUCED.

The original purpose for this all to happen – there were certain fishermen that would complain the FL-8 has too much sensitivity in shallow water even with the gain setting adjusted to "O" and because of this, the FL-8 would not be used in the summer time, especially in and around the weed lines or weed beds. The result of adding the suppression cable to the FL-8s has become very popular with the FL-8 owners because it enhances the unit's over all performance.

WHY IS MY ZERO INDICATION SO WIDE?

The width of the zero indication should never be more than 5 feet wide. Most problems occur when the rod, that the transducer is attached to, on the portable ice box is metal. Plastic or wood transducer arms cause little problems.

To test your portable box system – in air turn the FL-8 on, range 1 (0-30′), and with the gain control turned to maximum position, note the width of the zero indication. If the zero indication is wider than 5 feet, squeeze the transducer and metal rod together with your hand. While squeezing, if the zero gets smaller you need to work on the transducer attachment. To solve the problem on especially the metal transducer rods – remove transducer from the metal rod, using black electrical tape – tape three layers of tape around rod in the flat section of the rod, then lay plastic housing of the transducer of against the tape and continue to tape transducer onto the flat section on the metal arm. The tape has created an insulation layer between the metal rod and the plastic housing of the transducer. This insulation layer eliminates the transducer from picking up any transmission vibrations caused when the unit transmits the signal into the water.

WHY DOES MY FL-8 SOMETIMES GET A DIM READ OUT DISPLAY AND START TO SQUEAL?

When this happens, in 90% of the cases, low battery voltage is present. The FL-8 will loose display intensity and alarm sounds when the battery voltage goes below 9 to 9.5 volts. To prevent this from happening the battery must be charged more often. It is highly recommended that the lead acid battery (the Vexilar sealed lead acid, motor cycle battery, car battery, and trolling motor battery) should be charged after each and every use. YES, AFTER EACH USE. NEVER LEAVE A LEAD ACID BATTERY NOT CHARGED! IF THE BATTERY IS NOT CHARGED AFTER EACH USE, THE PLATES WILL SULFATE WHICH DECREASES THE BATTERY CAPACITANCE. CHARGE AT ROOM TEMPERATURE THEN STORE.

WHY IS THE BOTTOM INDICATION SO WIDE?

While fishing in a depth of 30 feet, a normal width of a bottom indication is from 5 to 12 feet wide. This width is controlled with the gain control – turn the gain down and the width decreases and turn the gain control up and the width increases. This happens at all depths. The width of the bottom is actually the summation of the radius of coverage on the bottom and is controlled by the gain control.

The proper way to set up the FL-8 and its bottom width is as follows: Aim the units transducer straight down towards the lake bottom (perpendicular is desired), now lower the fishing lure or bait to bottom and raise 1 foot and lay the fishing rod down beside the hole so as to have the fishing line as close to the transducer housing as possible, adjust the transducer arm so the lure or bait can be seen easily. Once a light on the dial indicates the bait or lure – jig the rod to verify that the dial indicates the bait or lure – jig the rod to verify that the dial light is your bait. Now re-adjust the gain control so the lure or bait target is shown in GREEN. This procedure should be used each time a new fishing hole is setup for fishing and let the BOTTOM WIDTH AND COLOR ADJUST ITSELF. THE LEADING EDGE OF THE BOTTOM LIGHT IS THE ACTUAL DEPTH.

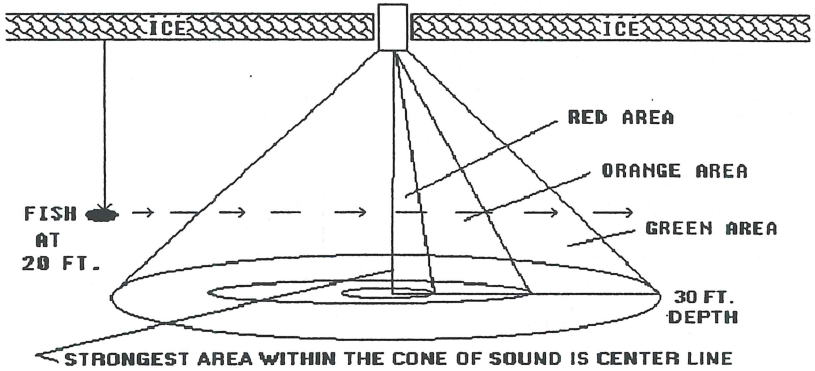

FL-8 SENSITIVITY AREAS
(THREE LEVELS)

GREEN AREA – WEAKEST OF LEVELS, LOW SIGNAL STRENGTH

ORANGE AREA – MIDDLE LEVEL, MEDIUM SIGNAL STRENGTH

RED AREA – STRONGEST LEVEL, HIGH SIGNAL STRENGHT

NOTE: IF FISH TARGET MOVES THROUGH THE CONE OF SOUND AT THE 20 FT. LEVEL AND THE SENSITIVITY SETTING DOESN'T CHANGE THE FISH SIGNAL DISPLAYED ON THE READOUT WILL CHANGE THROUGH ALL THREE COLORS.

THIS HAPPENS DUE TO THE SIGNAL STRENGTH OF THE FISH TARGET CHANGING FROM WEAK TO MEDIUM TO STRONG AS IT PASSES THROUGH THE CONE OF SOUND.

THE AREA SIZE OF THE THREE COLOR LEVELS CAN BE CHANGED BY THE OPERATOR ADJUSTING THE SENSITIVITY SETTING. LOW SENSITIVITY SETTING RESULTS IN SMALL COLOR AREAS THUS, HIGH SENSITIVITY WILL RESULT IN LARGER COLOR AREAS.

TRANSDUCER BEAM ANGLES VERSE AREA OF COVERAGE

DEPTH	DEGREES								
	6	9	14	16	19	22	32	38	50
10	1.05	1.57	2.46	2.81	3.35	3.89	5.73	6.89	9.33
15	1.57	2.36	3.68	4.22	5.02	5.83	8.60	10.33	13.99
20	2.10	3.15	4.91	5.62	6.69	7.78	11.47	13.77	18.65
25	2.62	3.94	6.14	7.03	8.37	9.72	14.34	17.22	23.32
30	3.14	4.72	7.37	8.43	10.04	11.66	17.20	20.66	27.98
35	3.67	5.51	8.59	9.84	11.71	13.61	20.07	24.10	32.64
40	4.19	6.30	9.82	11.24	13.39	15.55	22.94	27.55	37.30
45	4.72	7.08	11.05	12.65	15.06	17.49	25.81	30.99	41.97
50	5.24	7.87	12.28	14.05	16.73	19.44	28.67	34.43	46.63
55	5.76	8.66	13.51	15.46	18.41	21.38	31.54	37.88	51.29
60	6.29	9.44	14.73	16.86	20.08	23.33	34.41	41.32	55.96
65	6.81	10.23	15.96	18.27	21.75	25.27	37.28	44.76	60.62
70	7.34	11.02	17.19	19.68	23.43	27.21	40.14	48.21	65.28
75	7.86	11.81	18.42	21.08	25.10	29.16	43.01	51.65	69.95
80	8.39	12.59	19.65	22.49	26.77	31.10	45.88	55.09	74.61
85	8.91	13.38	20.87	23.89	28.45	33.04	48.75	58.54	79.27
90	9.43	14.17	22.10	25.30	30.12	34.99	51.61	61.98	83.94
95	9.96	14.95	23.33	26.70	31.80	36.93	54.48	65.42	88.60
100	10.48	15.74	24.56	28.11	33.47	38.88	57.35	68.87	93.26
120	12.58	18.89	29.47	33.73	40.16	46.65	68.82	82.64	111.91
130	13.63	20.46	31.92	36.54	43.51	50.54	74.55	89.53	121.24
140	14.67	22.04	34.38	39.35	46.86	54.43	80.29	96.41	130.57
150	15.72	23.61	36.84	42.16	50.20	58.31	86.02	103.30	139.89

BUBBLE LEVEL INSTALLATION INSTRUCTIONS

THERE IS MORE TO PUTTING A BUBBLE LEVEL ON A TRANSDUCER THAN JUST GLUEING IT ON. IN ORDER TO ACHIEVE A TRUE VERTICAL SOME CAREFUL STEPS MUST BE TAKEN TO COMPENSATE FOR THE ACCUMULATION OF SMALL TOLERANCE ERRORS THAT OCCUR DURING THE PRODUCTION OF A TRANSDUCER.

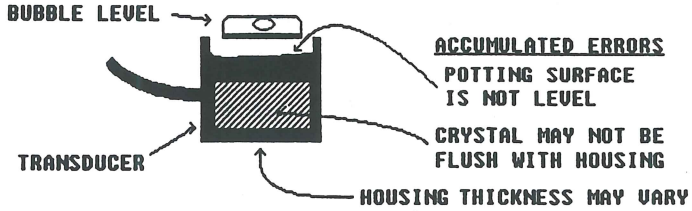

THE RESULT OF POOR INSTALLATION IS A CONE THAT POINTS TO THE SIDE WHEN THE LEVEL IS BALANCED, MAKING YOUR BAIT HARD TO SEE.

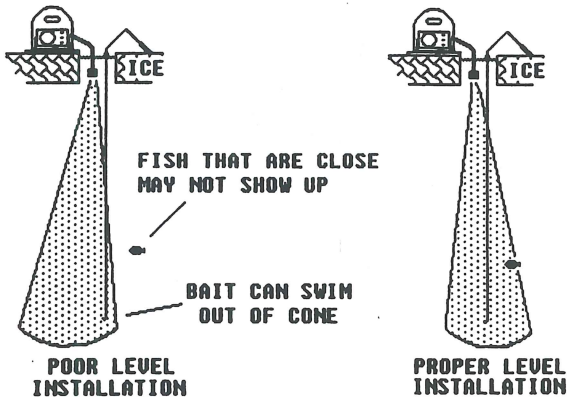

WITH THE LEVEL PROPERLY INSTALLED YOU WILL SEE YOUR BAIT AT ALL TIMES, SEE ALL FISH TARGETS AROUND YOUR LINE, AND BE ABLE TO USE A LOWER GAIN SETTING.

TO PROPERLY INSTALL A BUBBLE LEVEL TO A TRANSDUCER, CAREFULLY FOLLOW THE INSTRUCTIONS ON THE REVERSE SIDE OF THIS SHEET.

1. SET YOUR DEPTHFINDER ASSEMBLY ON THE EDGE OF A KITCHEN COUNTER OR TABLE TOP OVER A HARD SURFACED FLOOR.

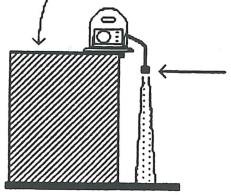

2. TURN THE UNIT ON AND ADJUST THE GAIN TO MAXIMUM. POINT THE TRANSDUCER AT THE FLOOR AND WATCH FOR A BOTTOM SIGNAL TO APPEAR ON THE SCREEN. BE CAREFUL NOT TO HAVE THE TRANSDUCER TOO CLOSE TO A CABINET OR OTHER VERTICAL SURFACE AS IT MAY MAKE IT HARD TO FIND THE ECHO. **SPECIAL NOTE:** IF THE TRANSDUCER ARM IS MADE OF METAL BE SURE TO INSULATE IT FROM THE TRANSDUCER BY WRAPPING ELECTRICAL TAPE AROUND THE ARM. THIS WILL REDUCE THE WIDTH OF THE ZERO LIGHT AND MAKE SHALLOW WATER READINGS MUCH EASIER.

3. TO FIND THE TRUE VERTICAL POSITION OF THE TRANSDUCER KEEP YOUR EYE ON THE SCREEN AT THE SAME TIME YOU FINELY ADJUST THE TRANSDUCER ARM POSITION. YOU WANT TO FIND THE POSITION THAT GIVES THE STRONGEST READING ON THE SCREEN. THIS WILL BE DISPLAYED BY THE NUMBER AND SIZE OF ECHOES THAT APPEAR, THE MORE AND THE WIDER THE BETTER. A GOOD AIR DEMONSTRATION WITH THE TRANSDUCER VERY CLOSE TO TRUE VERTICAL WOULD LOOK MUCH LIKE THIS;

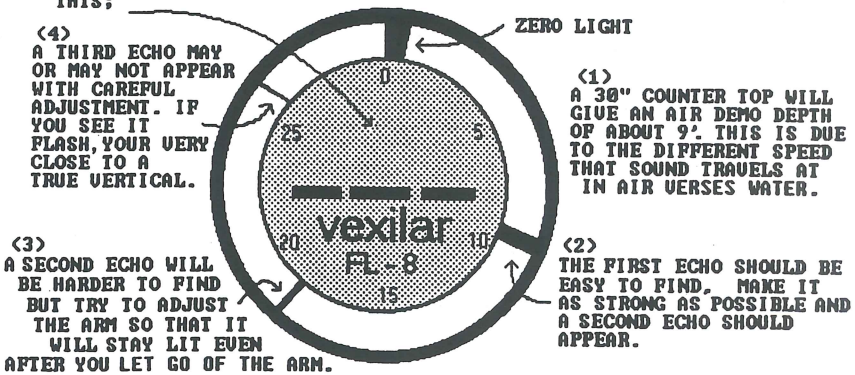

4. WITH THE ARM HOLDING THE STRONGEST READING POSSIBLE ATTACH THE BUBBLE LEVEL TO THE TRANSDUCER BY SQUEEZING A GOOD SIZE PUDDLE OF RTV OR SILICONE GLUE ONTO THE BOTTOM OF THE LEVEL AND THEN PLACE THE LEVEL ON THE TRANSDUCERS TOP. CAREFULLY ADJUST THE LEVEL SO THAT THE BUBBLE IS CENTERED MAKING SURE THAT THE READING ON THE SCREEN DOES NOT CHANGE. LET THE GLUE DRY COMPLETLY.

VEXILAR INC.,9252 GRAND AVE S., MPLS. MN. 55420 (612) 884-5291

NOTES

NOTES

NOTES